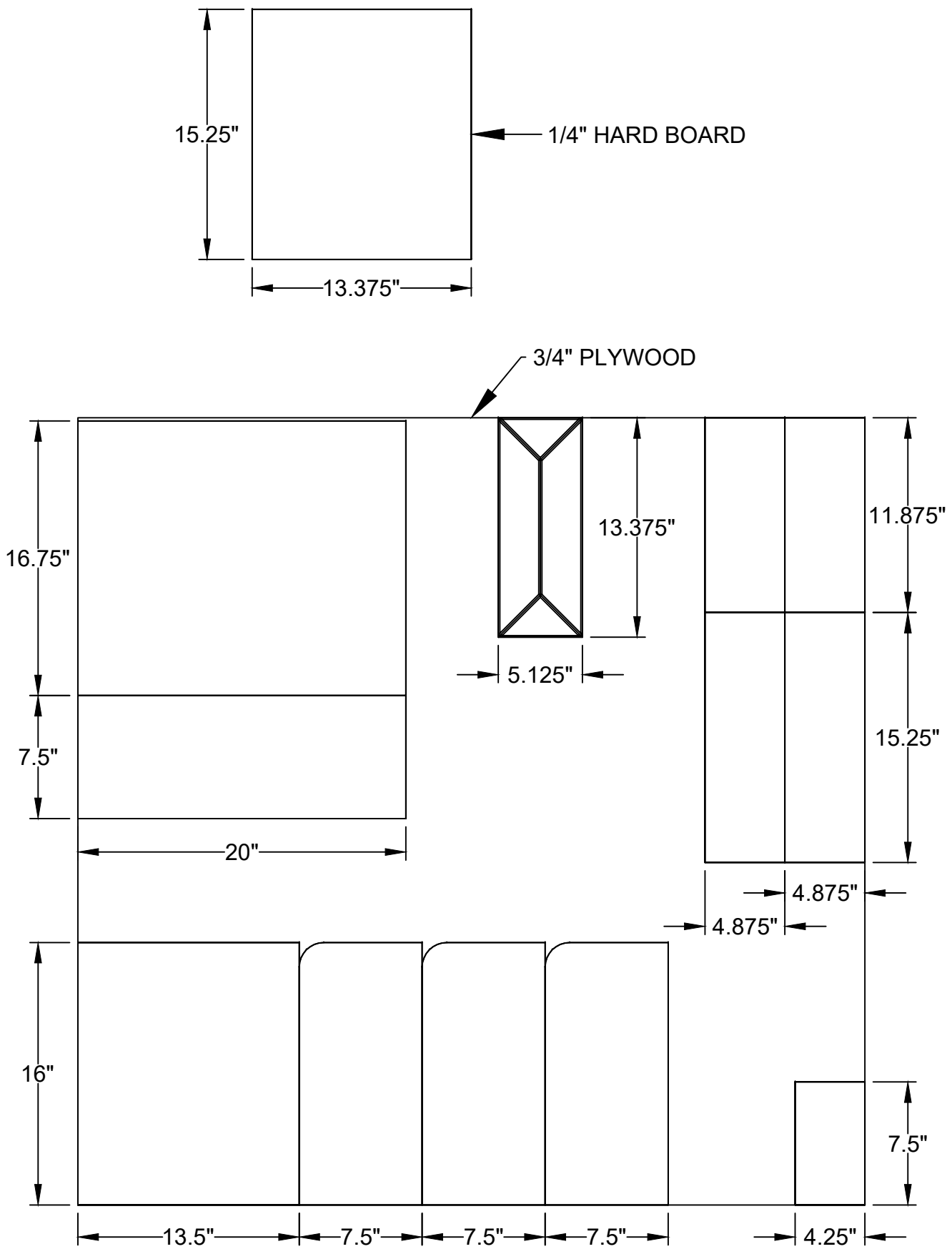
15.25"
1/4" HARD BOARD
13.375"
3/4" PLYWOOD
16.75"
13.375"
11.875"
5.125"
7.5"
15.25"
20"
4.875"
4.875"
16"
7.5"
13.5"
7.5"
7.5"
7.5"
4.25"

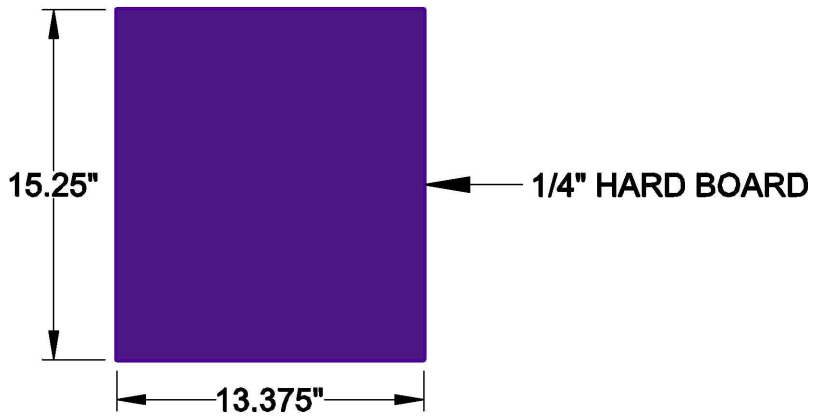
15.25"
1/4" HARD BOARD
13.375"

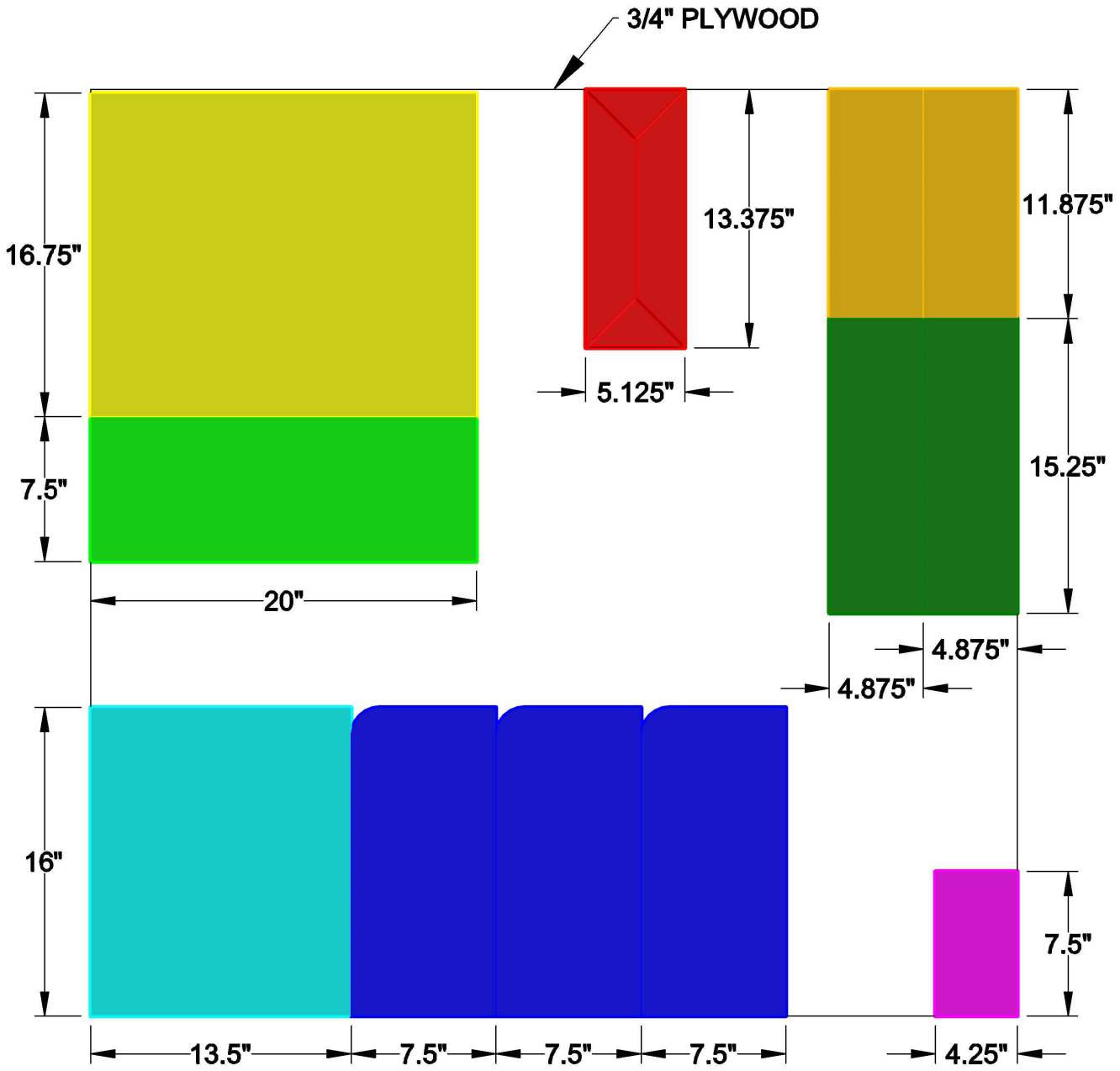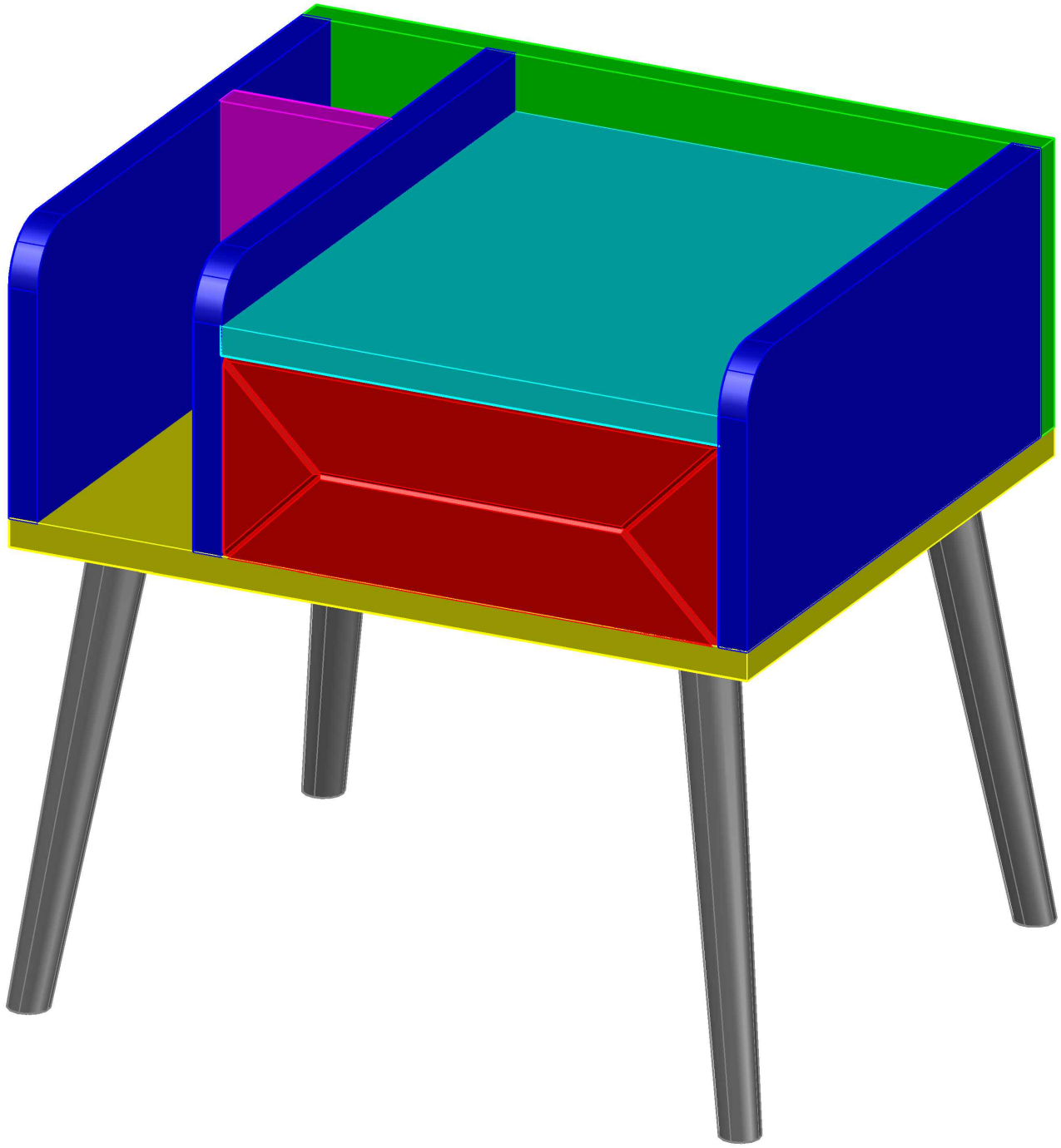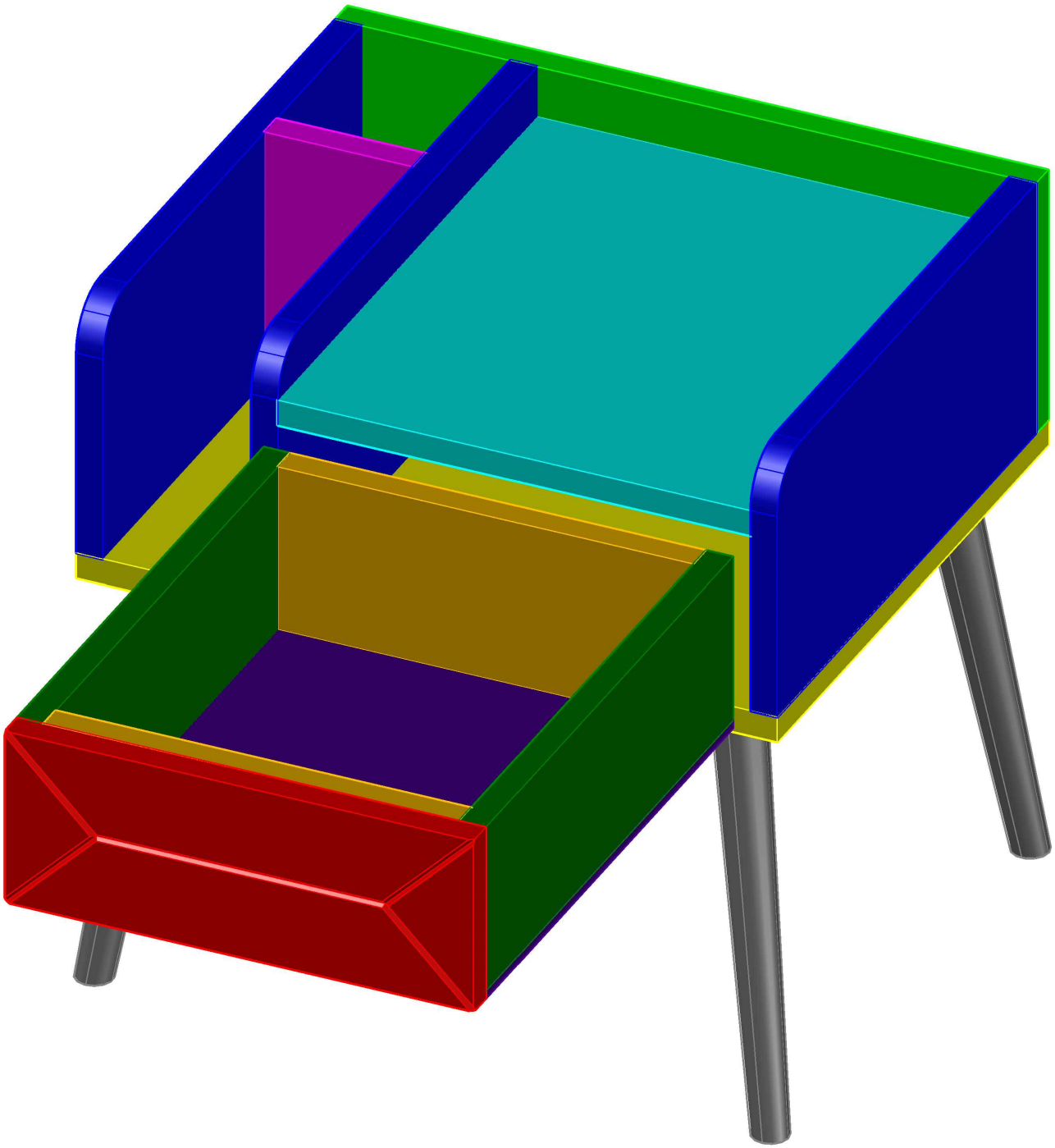
3/4" PLYWOOD
16.75"
13.375"
11.875"
5.125"
7.5"
15.25"
20"
4.875"
4.875"
16"
7.5"
13.5"
7.5"
7.5"
7.5"
4.25"