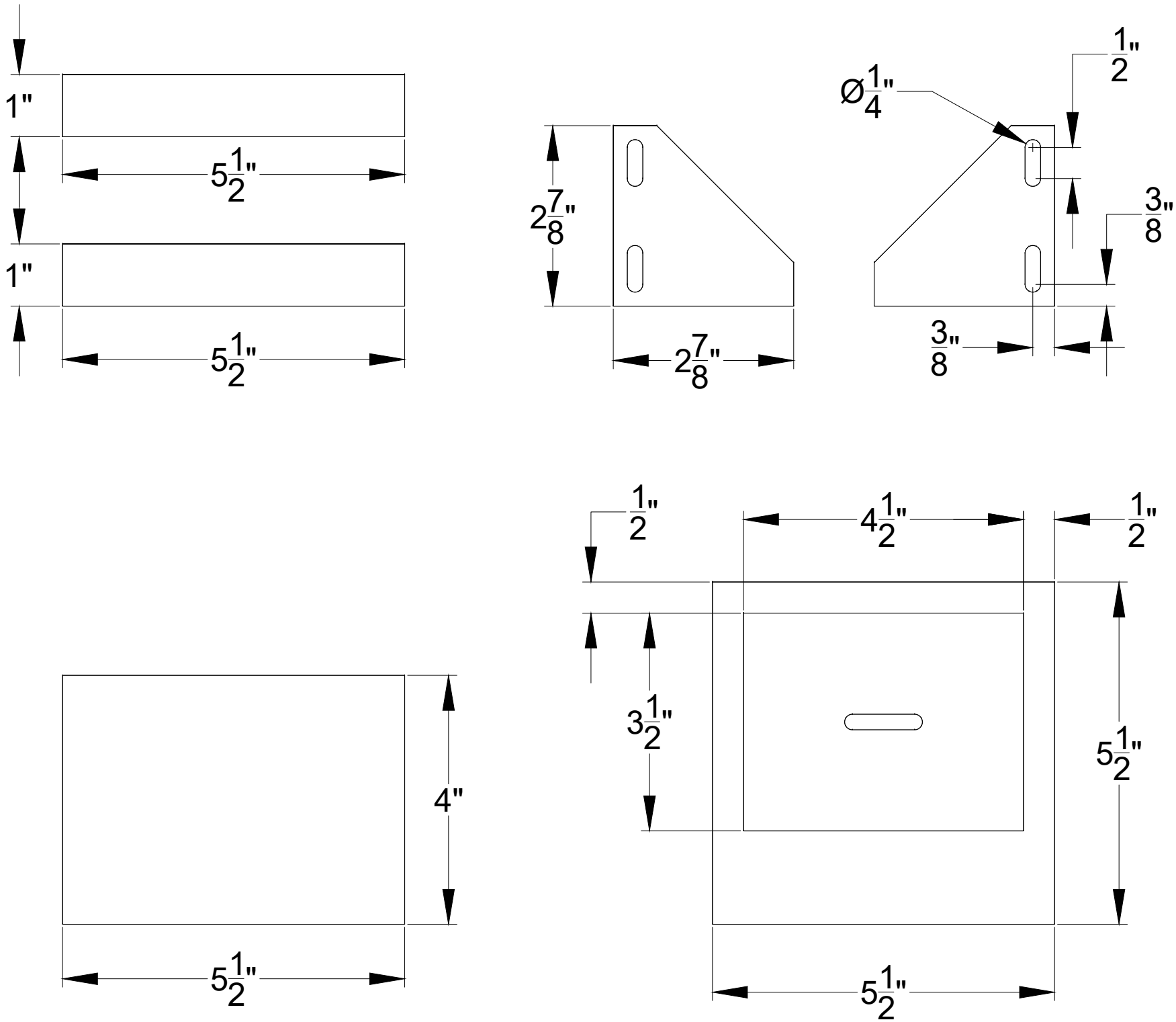
1"
5 1/2"
1"
5 1/2"
2 7/8"
2 7/8"
Ø 1/4"
1/2"
3/8"
3/8"
1/2"
4 1/2"
1/2"
3 1/2"
5 1/2"
4"
5 1/2"
5 1/2"

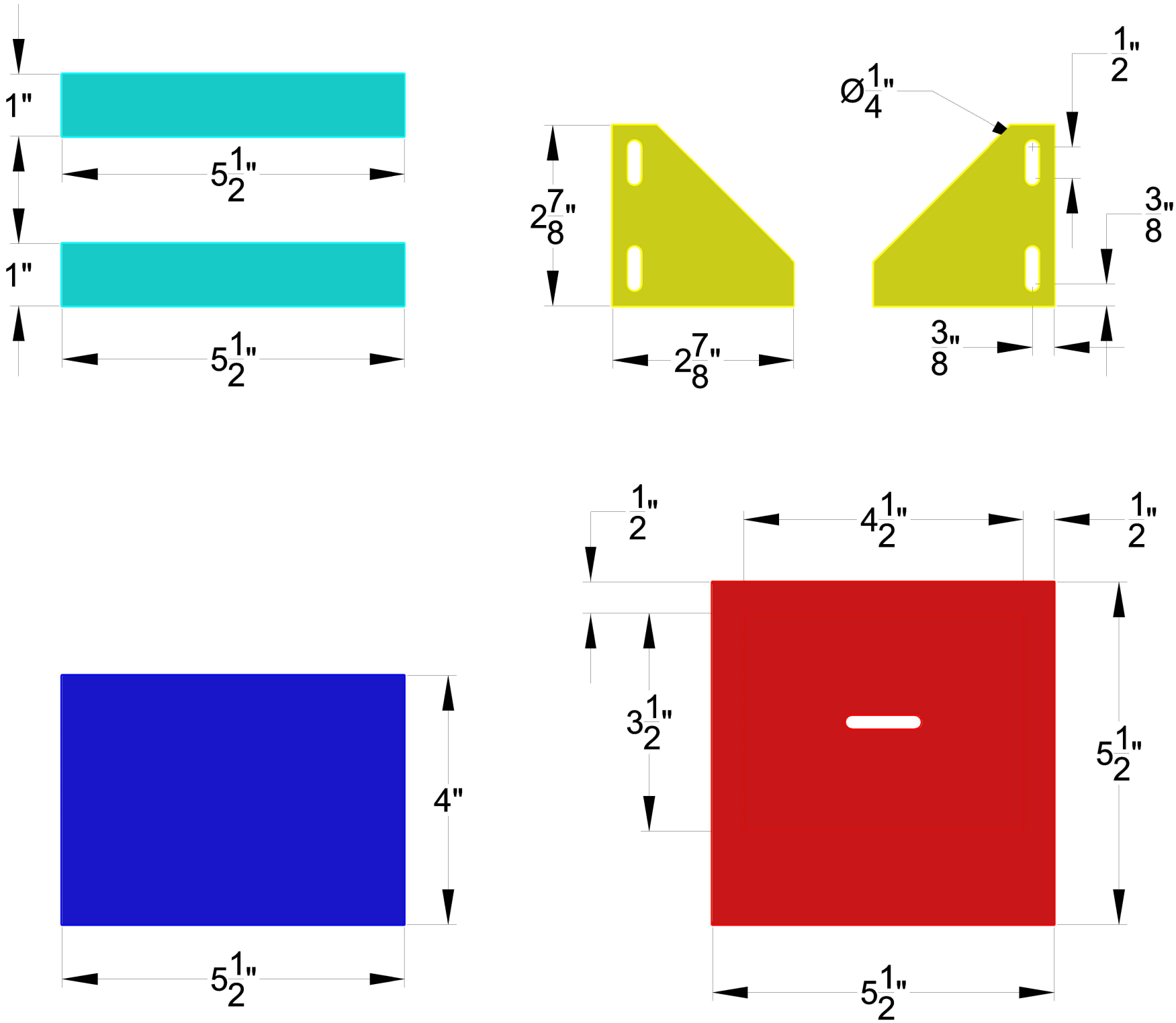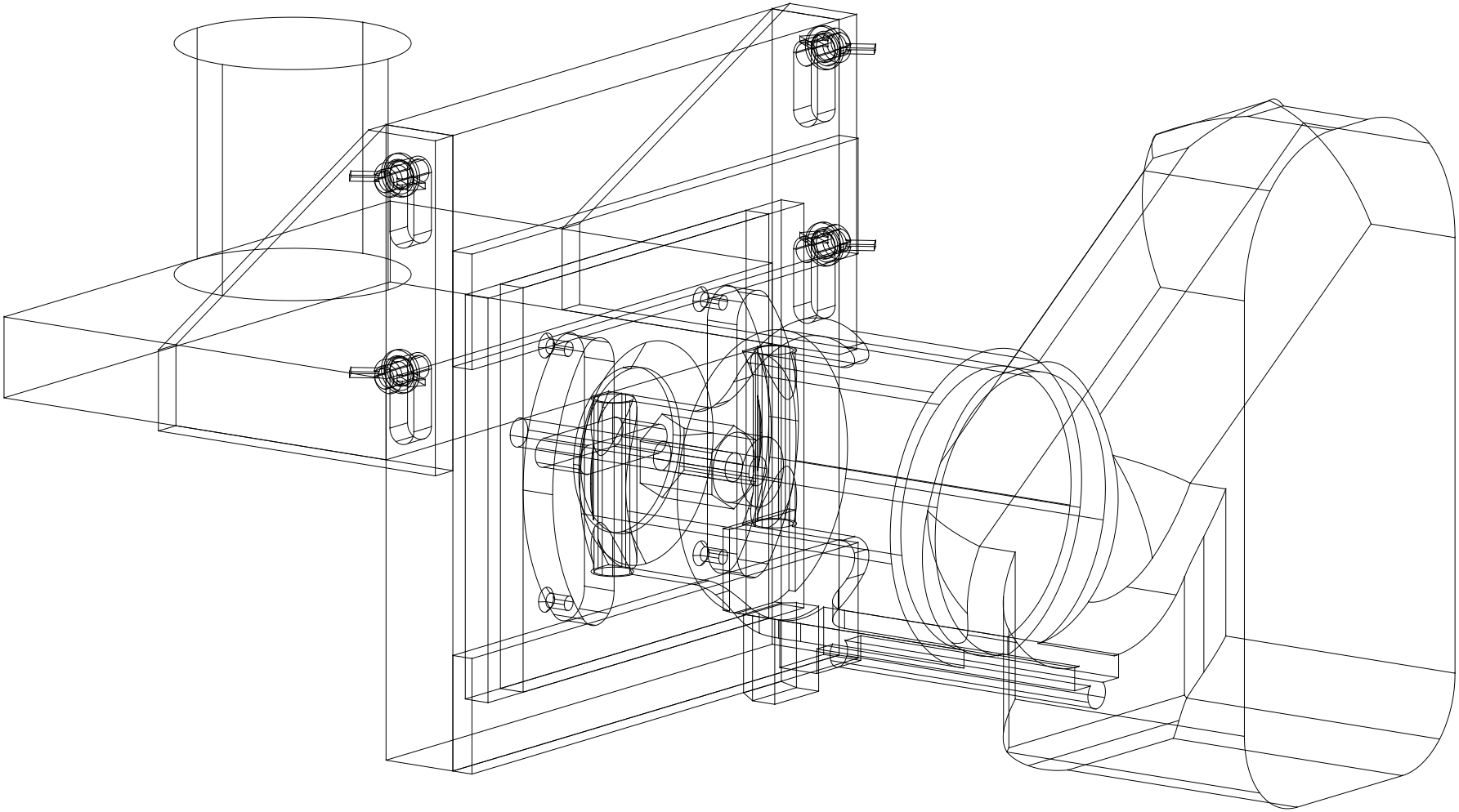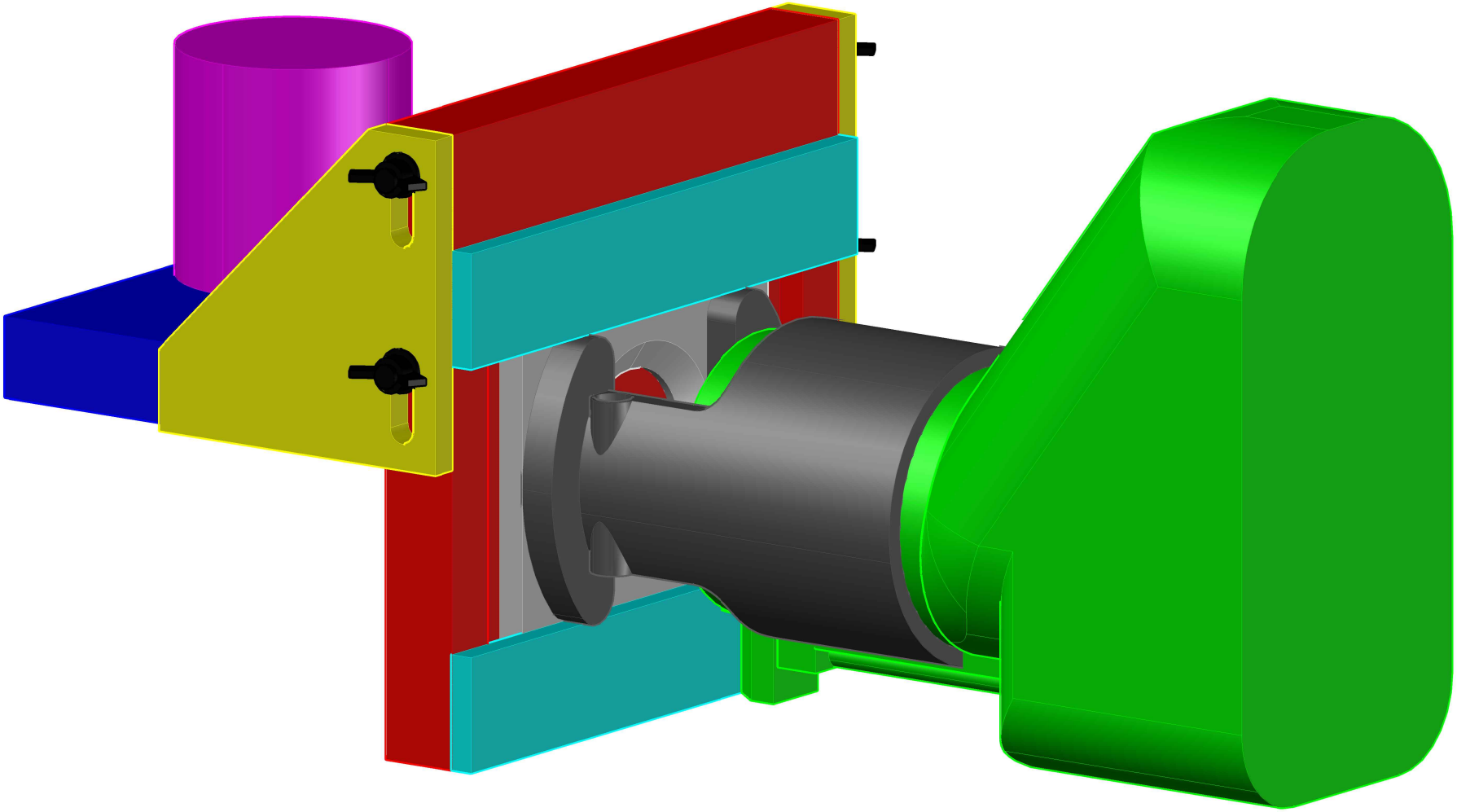
1"
5 1/2"
1"
5 1/2"
2 7/8"
2 7/8"
Ø 1/4"
1/2"
3/8"
3/8"
4"
5 1/2"
1/2"
4 1/2"
1/2"
3 1/2"
5 1/2"
5 1/2"