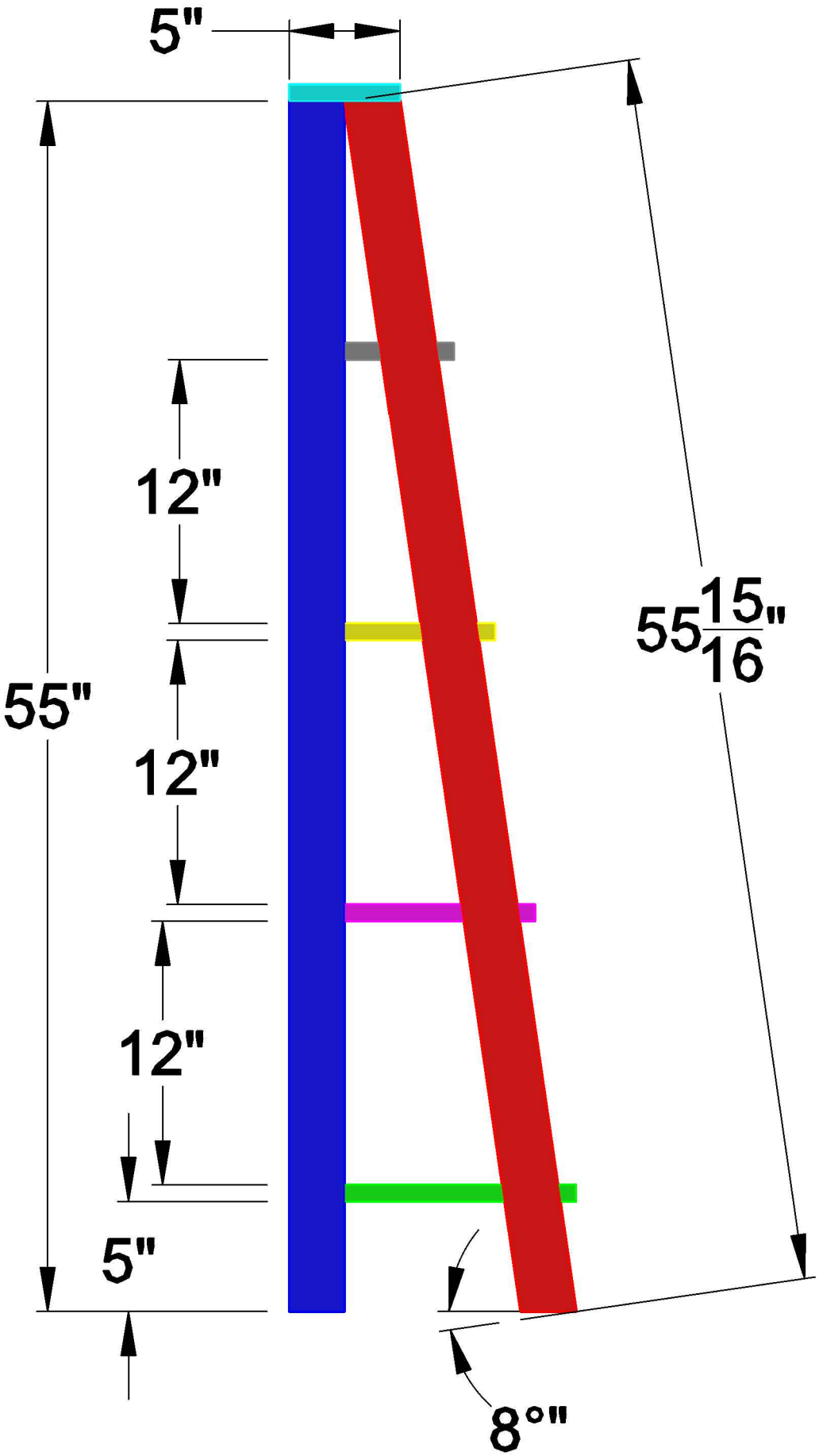
5"
12"
12"
12"
55"
5"
55 15/16"
8°"

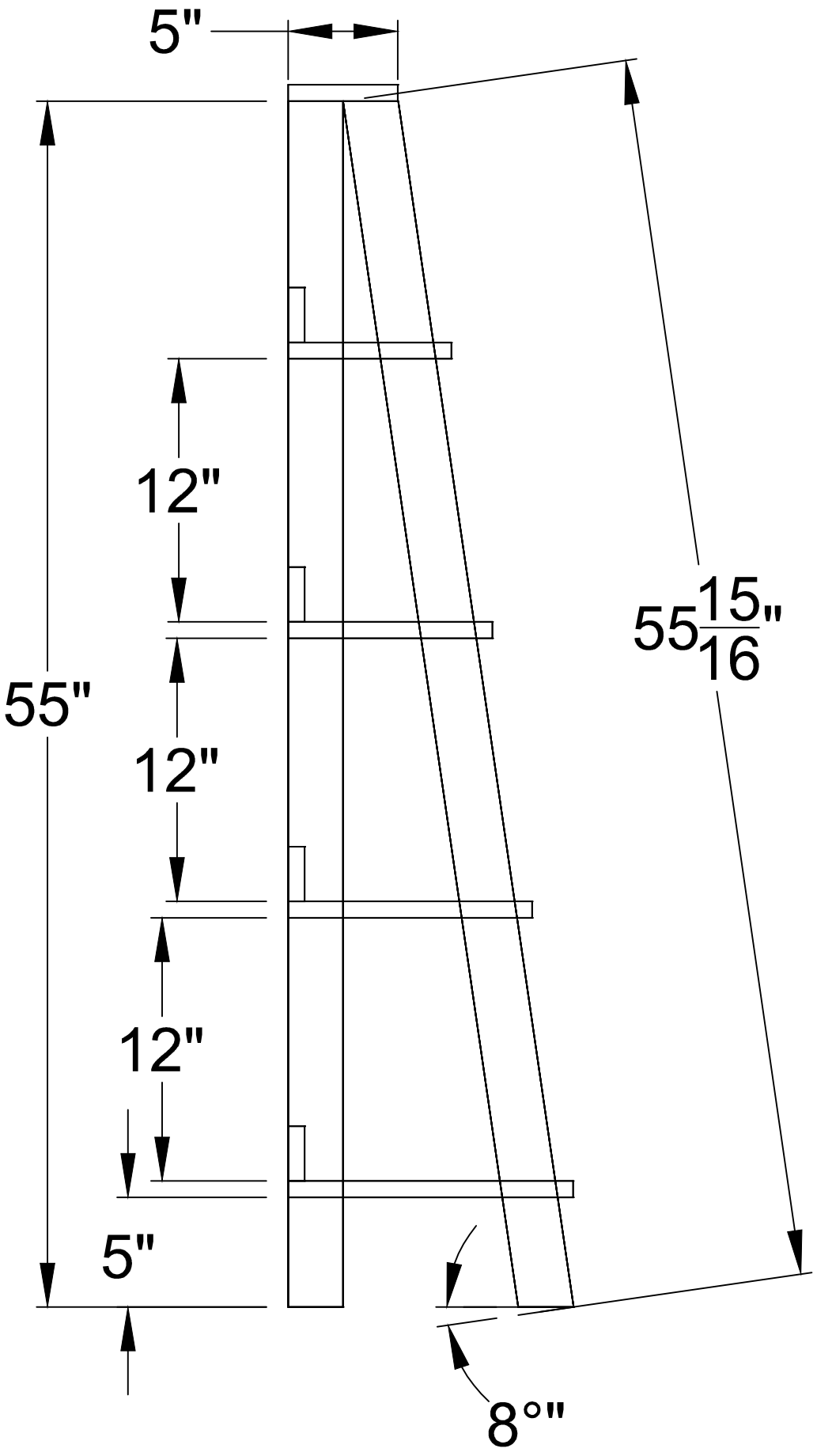
5"
12"
12"
12"
55"
5"
55 15/16"
8°"

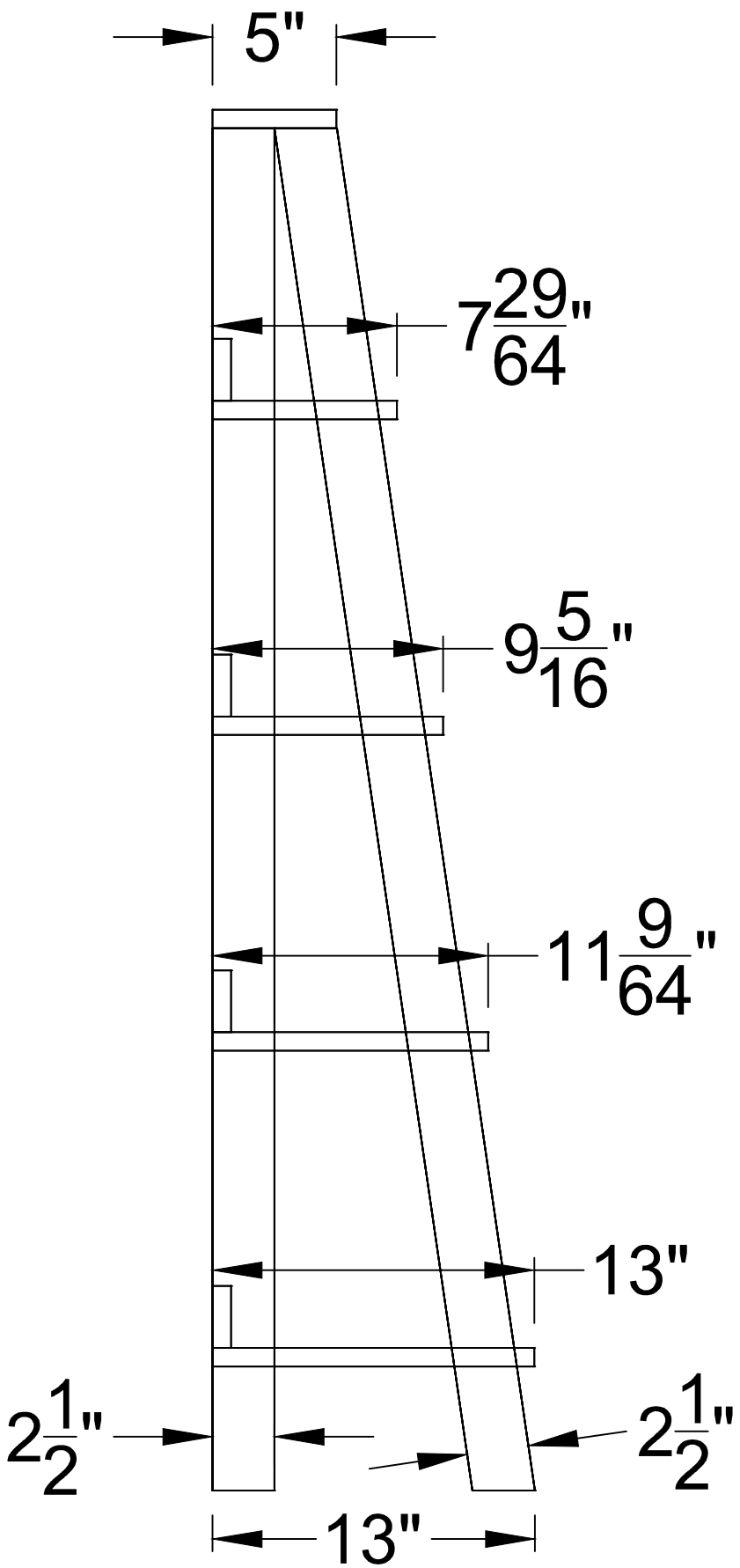
5"
7 29/64"
9 5/16"
11 9/64"
13"
2 1/2"
2 1/2"
13"

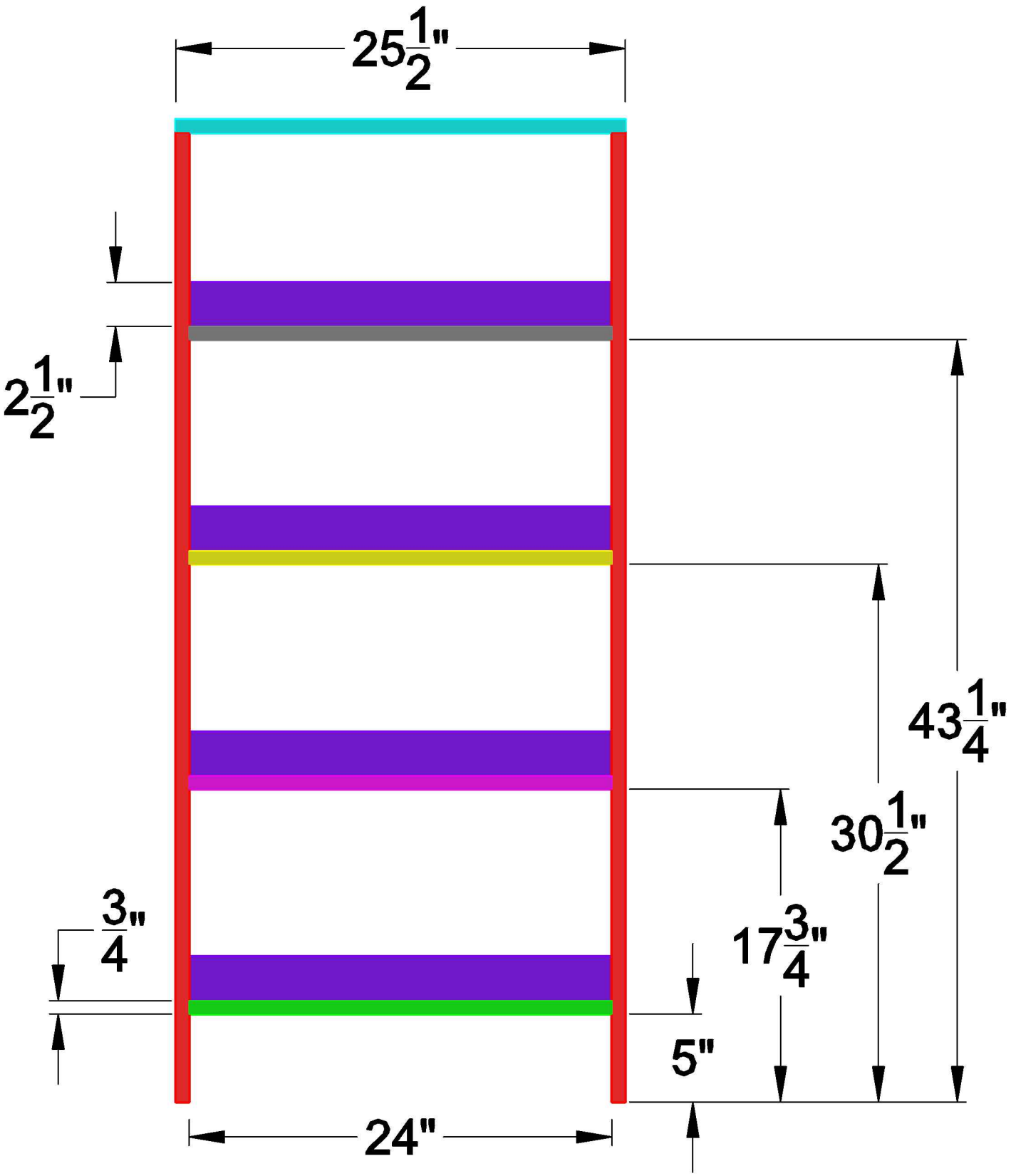
25 1/2"
2 1/2"
43 1/4"
30 1/2"
17 3/4"
3/4"
5"
24"

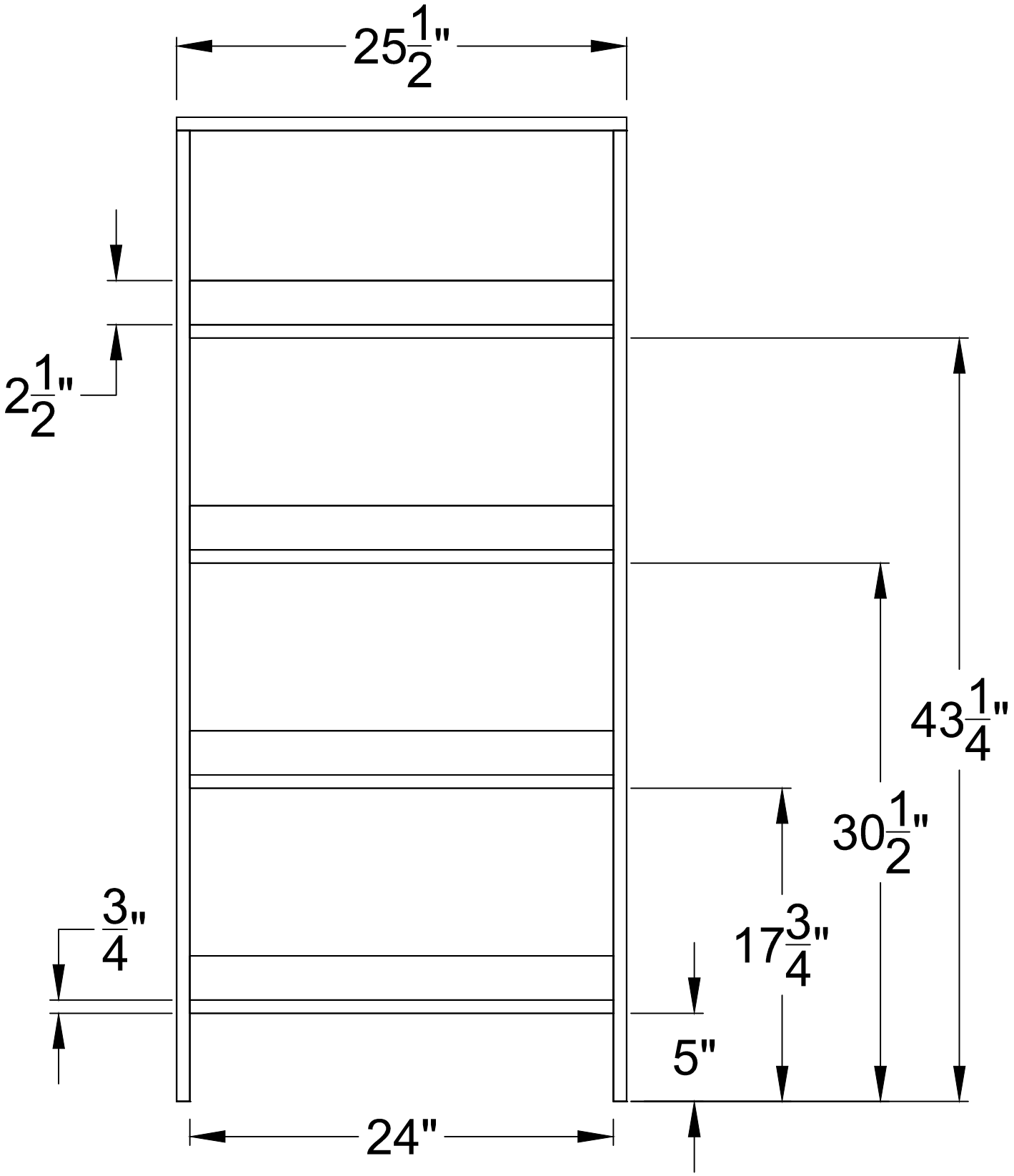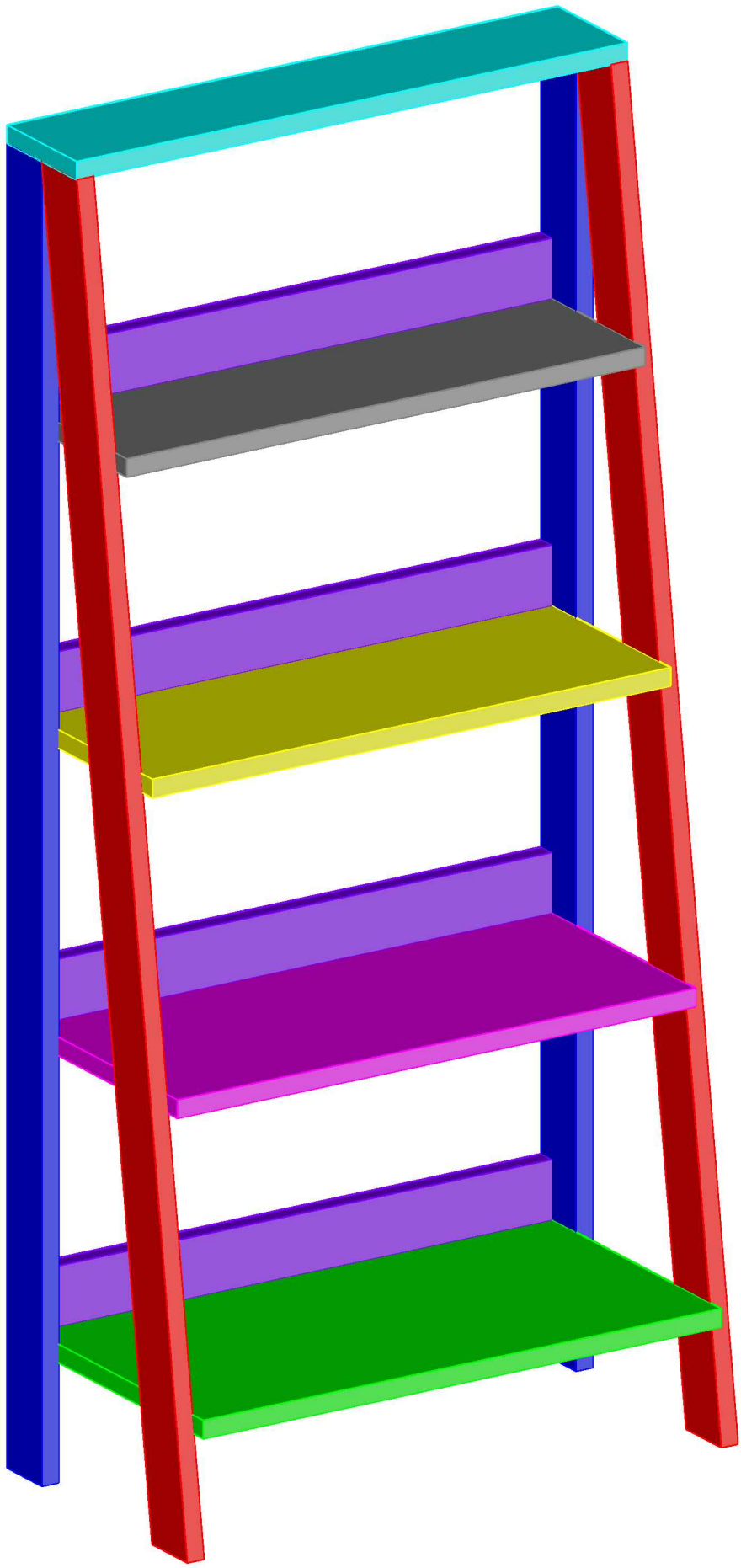
25 1/2"
2 1/2"
43 1/4"
30 1/2"
17 3/4"
3/4"
5"
24"