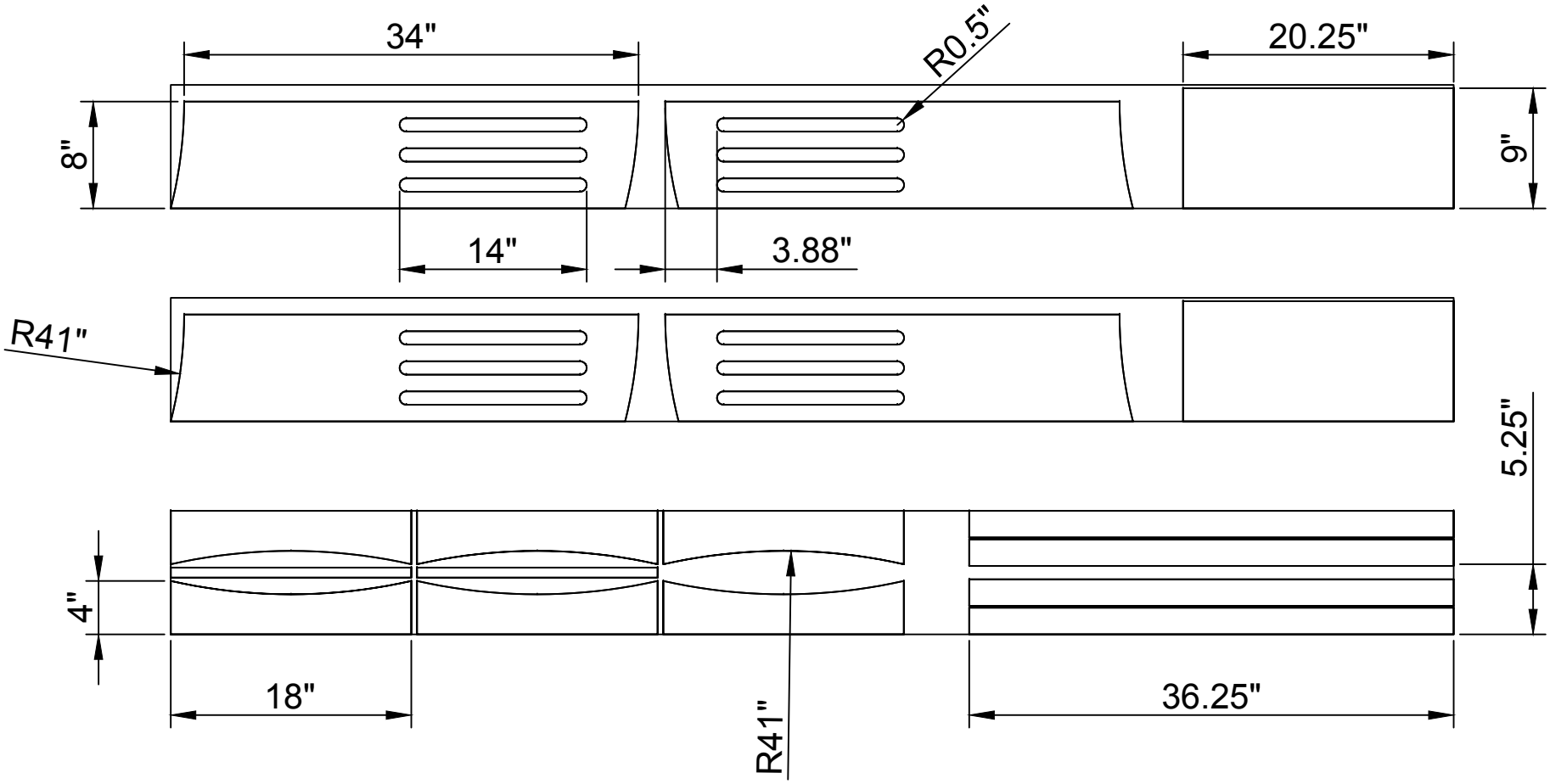
34"
R0.5"
20.25"
8"
9"
14"
3.88"
R41"
5.25"
4"
18"
R41"
36.25"

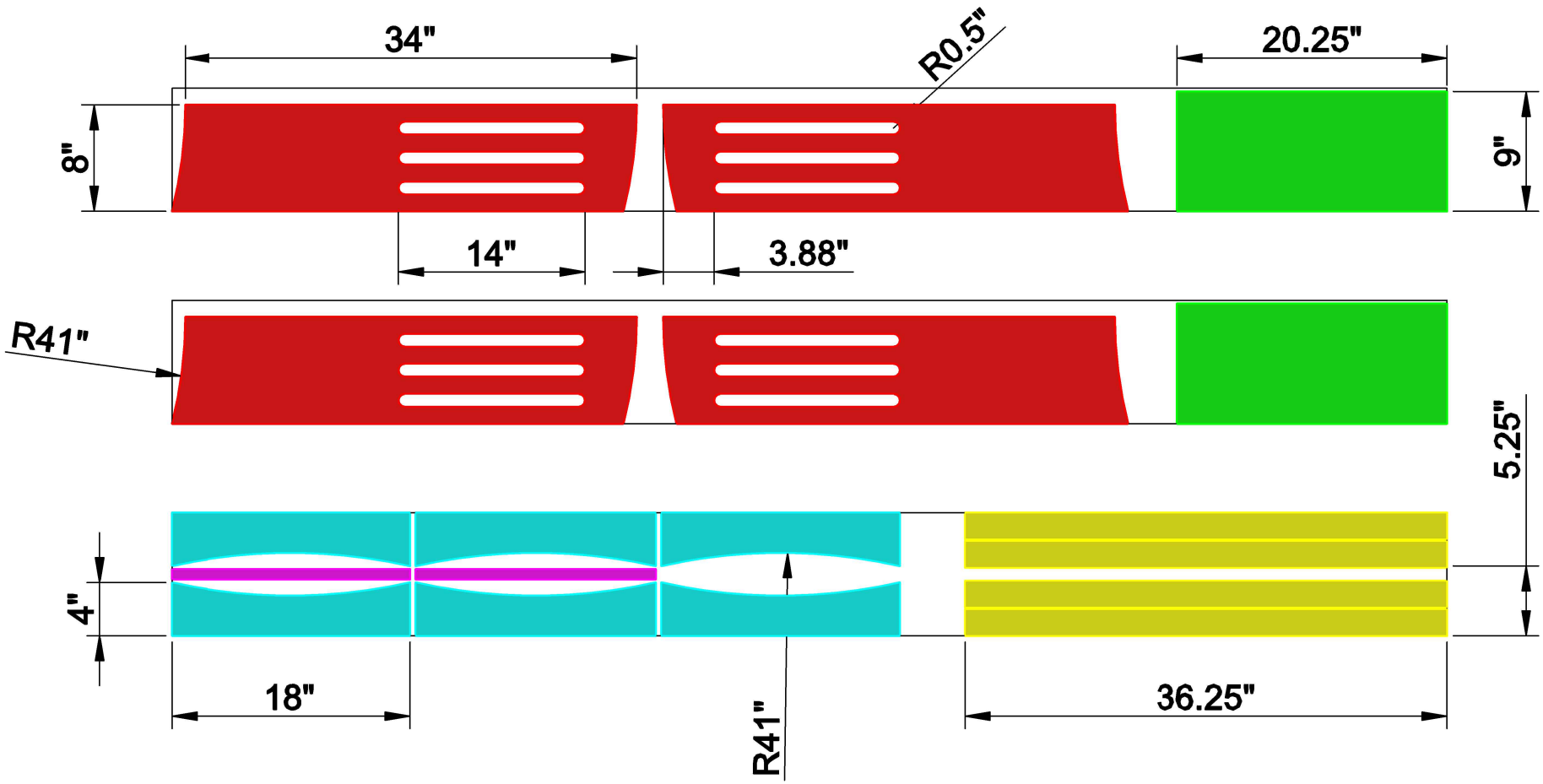
34"
R0.5"
20.25"
8"
9"
14"
3.88"
R41"
5.25"
4"
18"
R41"
36.25"

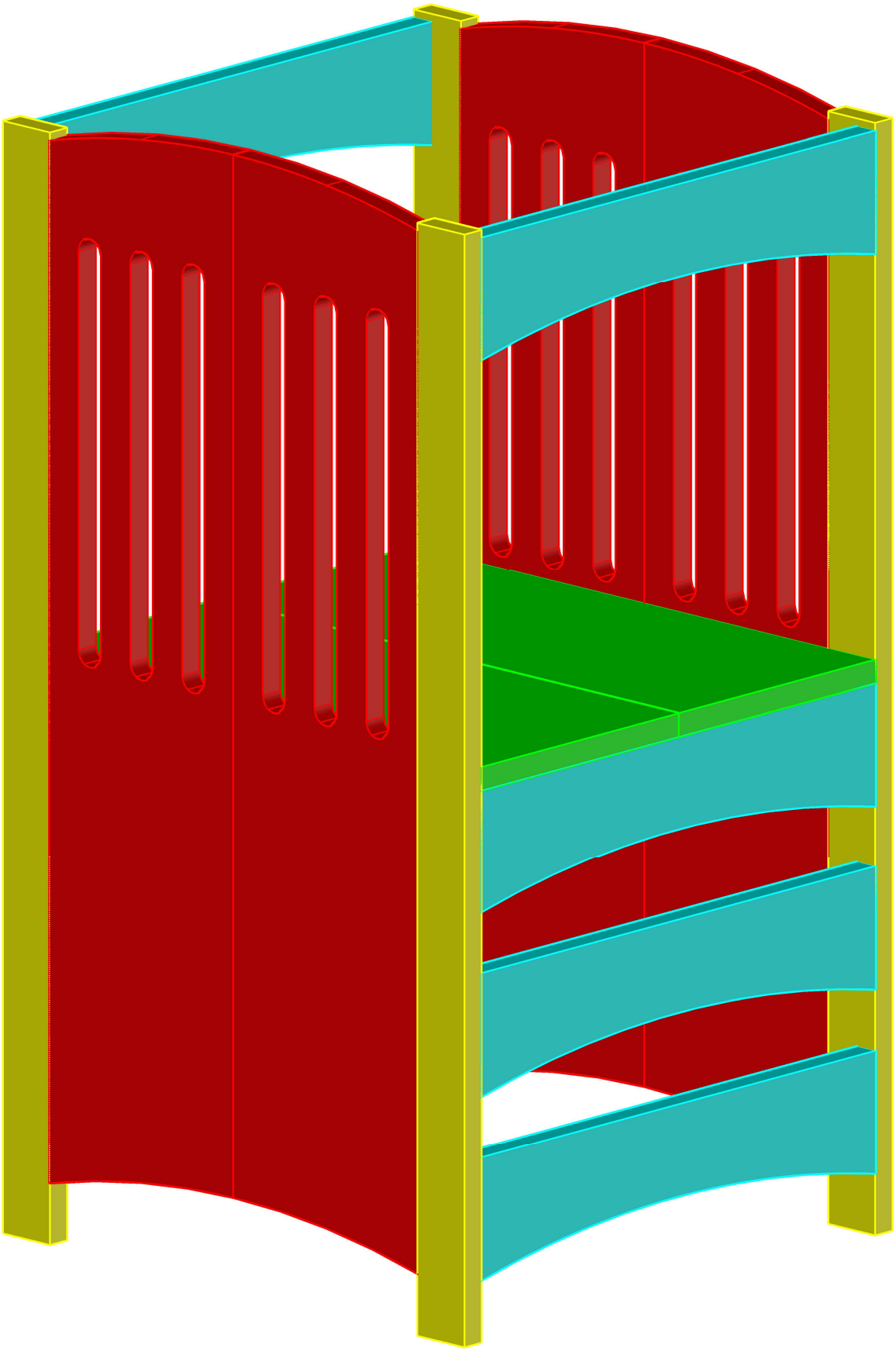

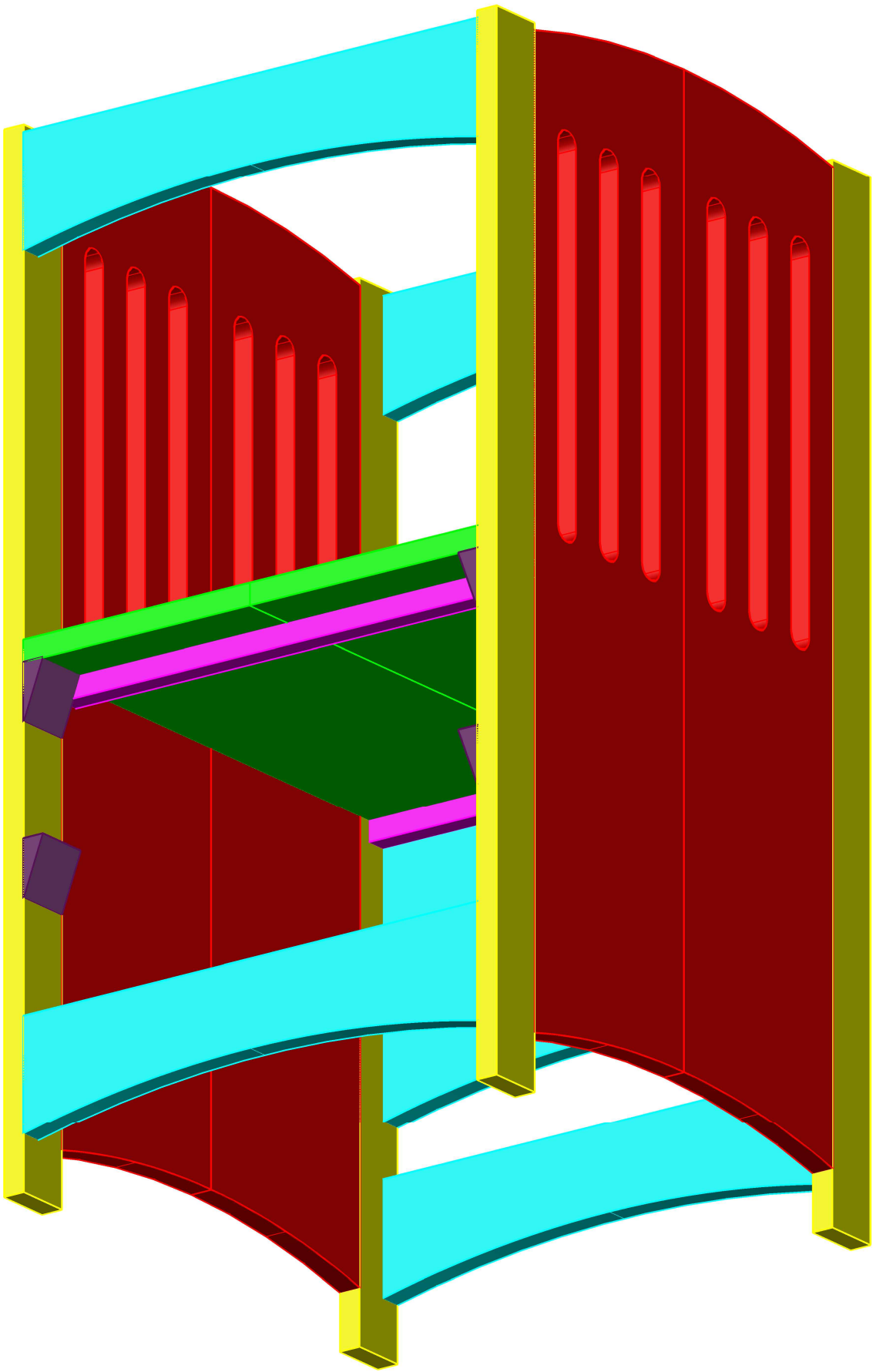

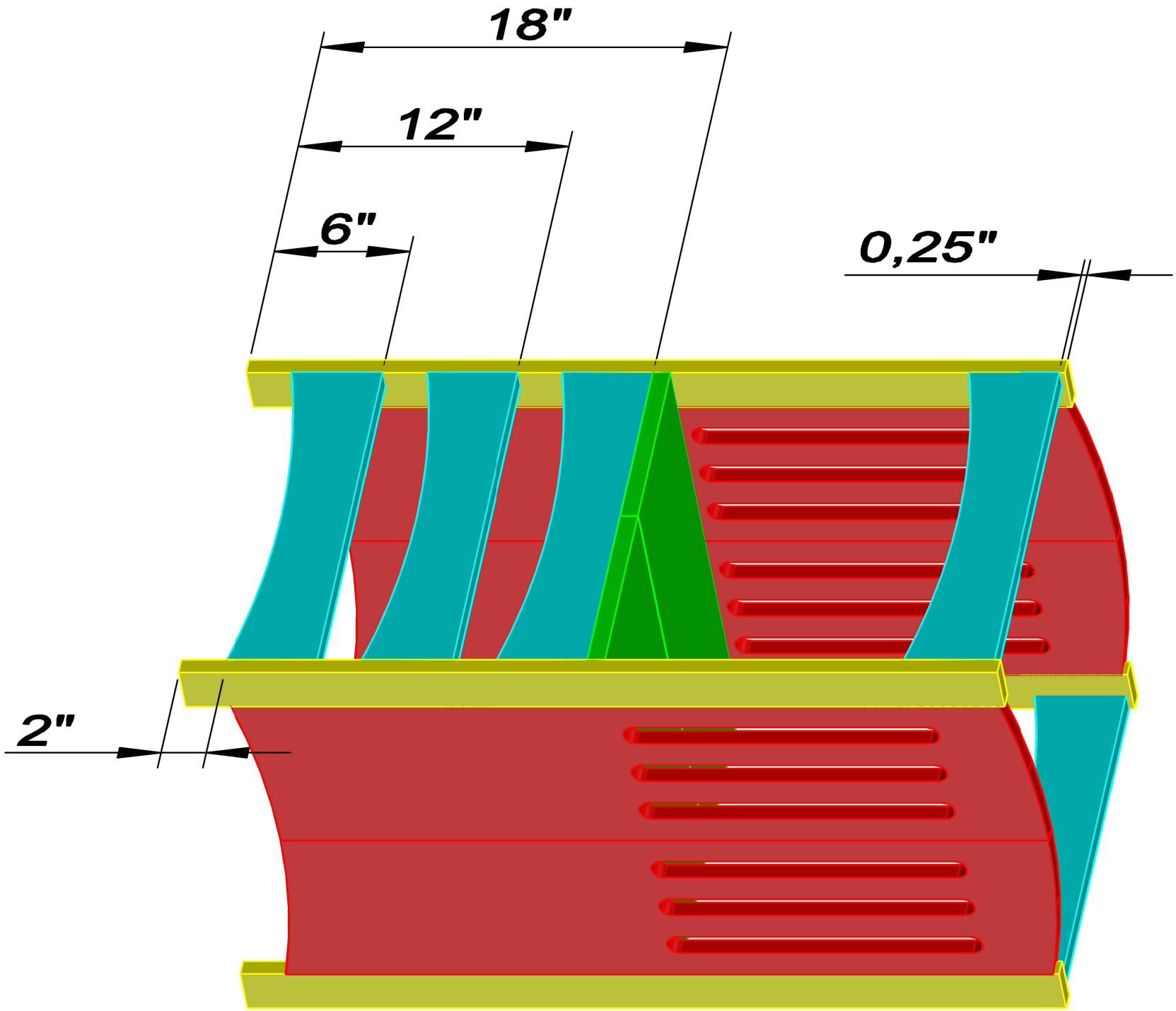
18"
12"
6"
0,25"
2"