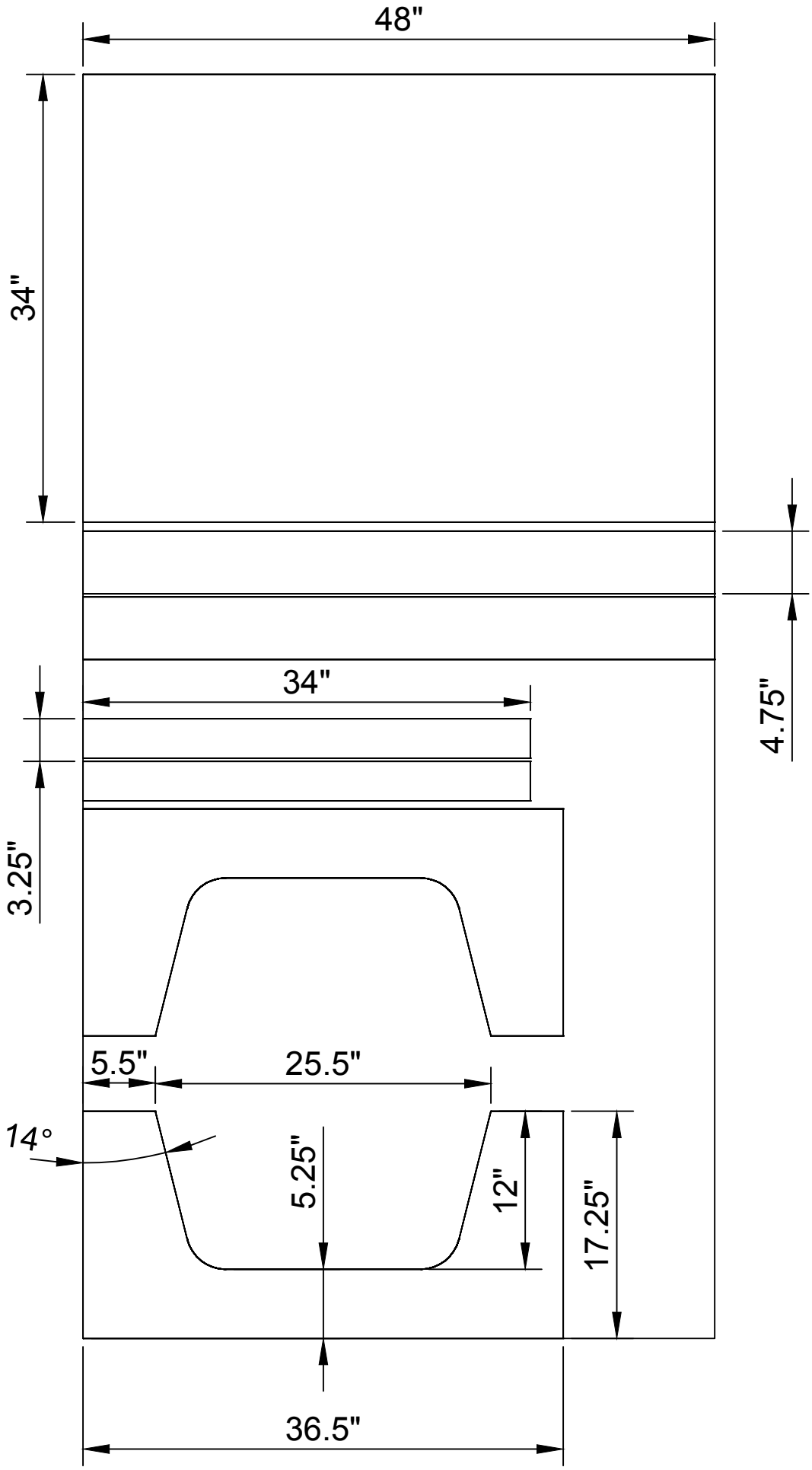
48"
34"
4.75"
34"
3.25"
5.5"
25.5"
14°
5.25"
12"
17.25"
36.5"

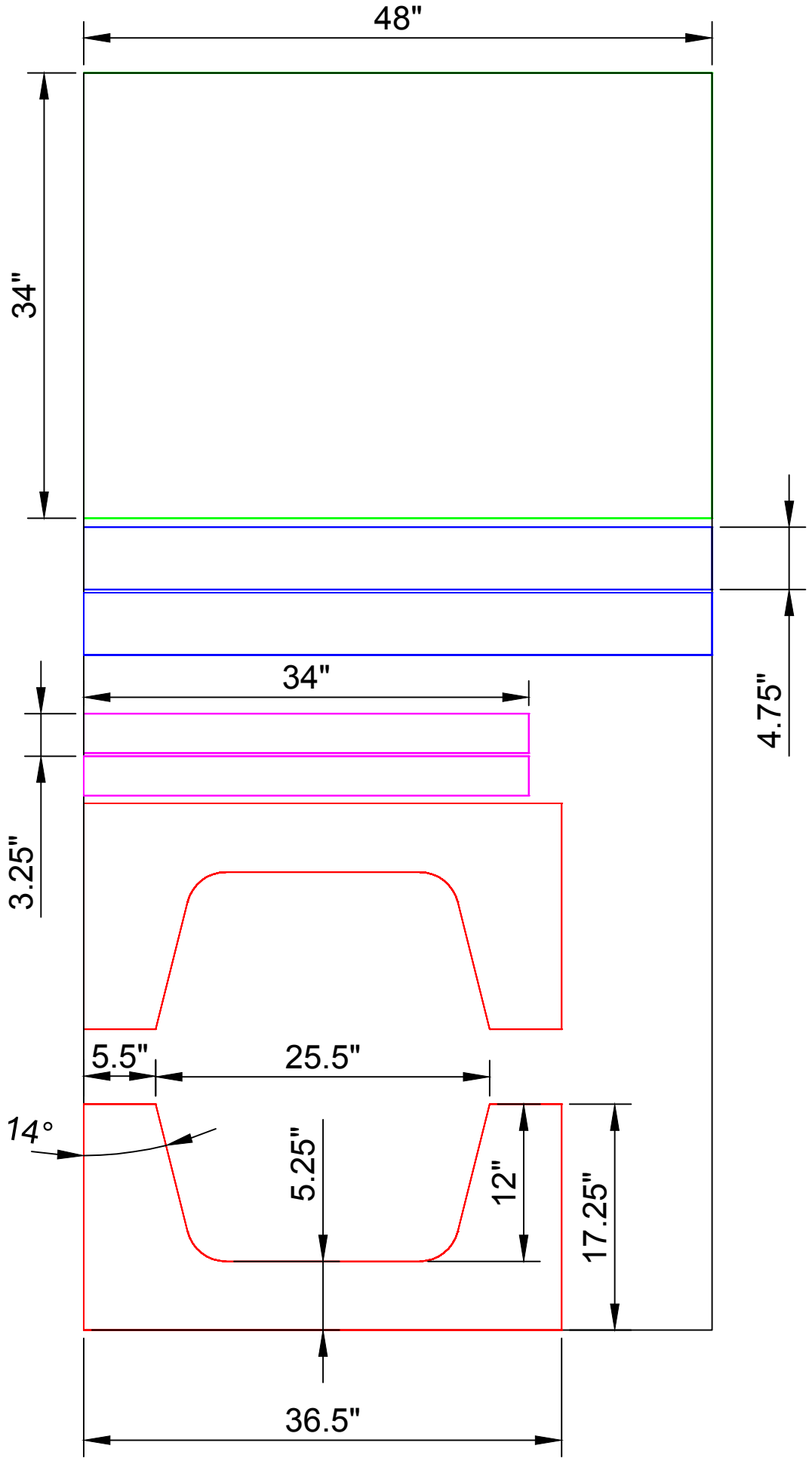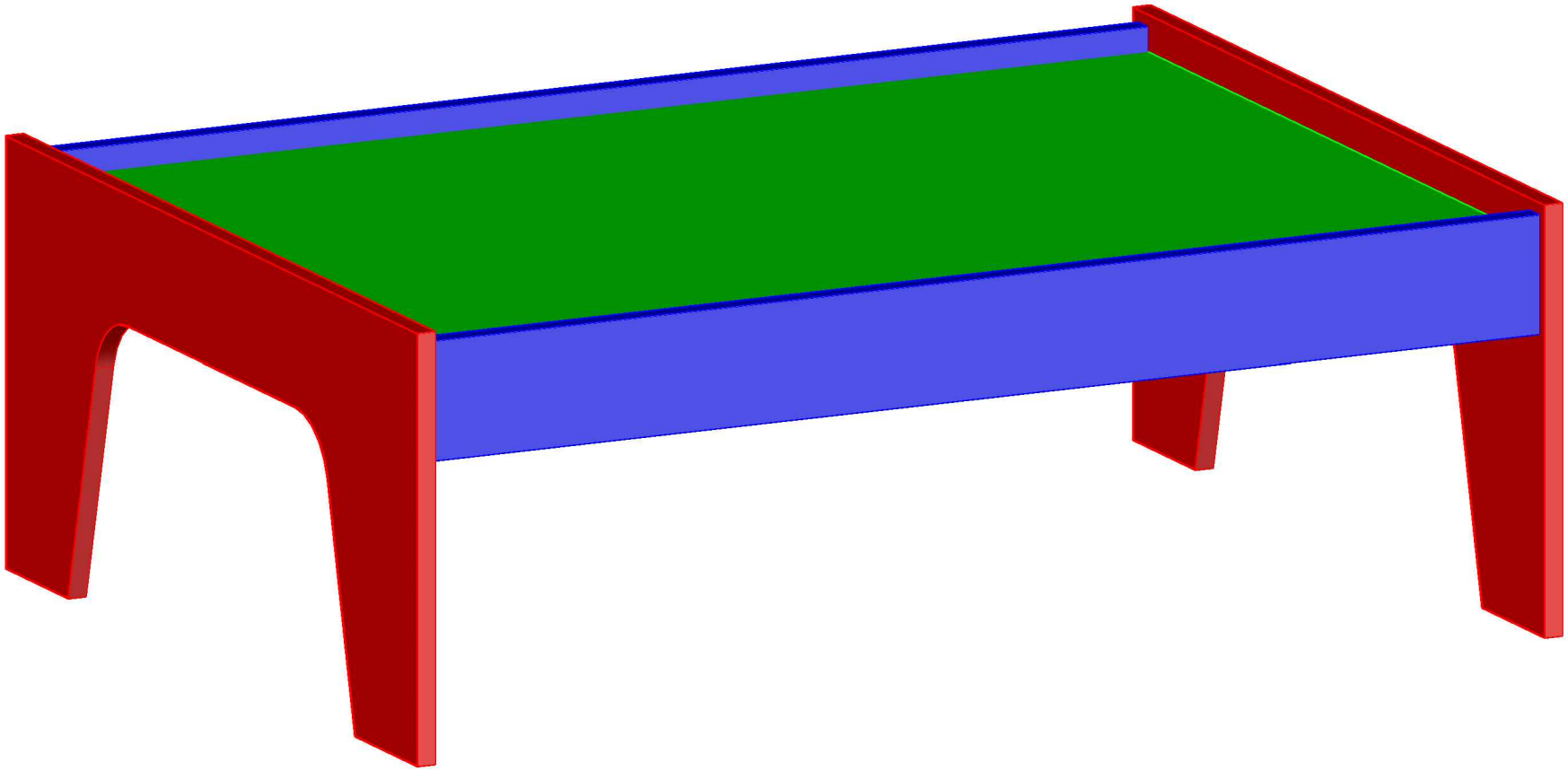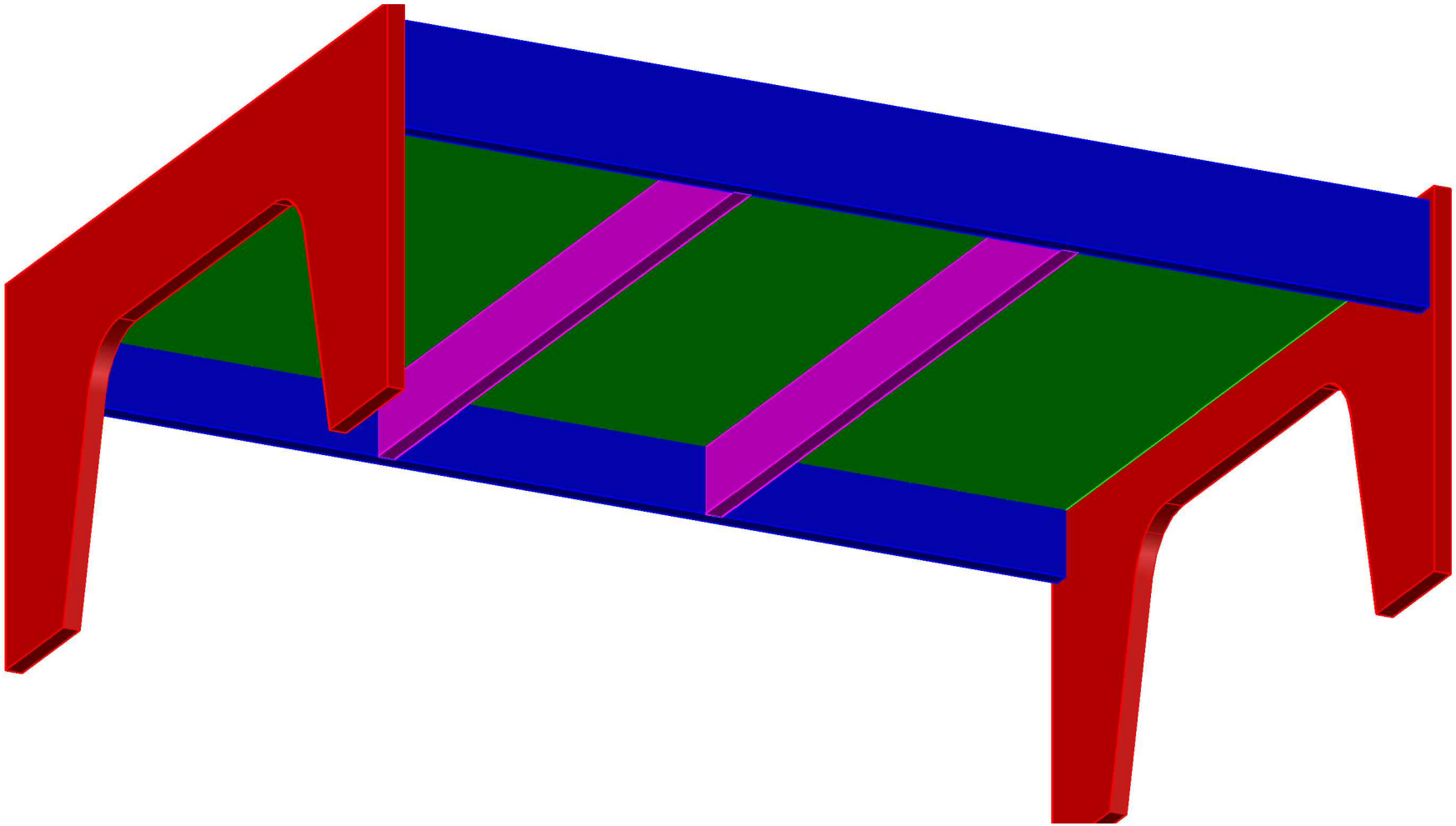
48"
34"
4.75"
34"
3.25"
5.5"
25.5"
14°
5.25"
12"
17.25"
36.5"