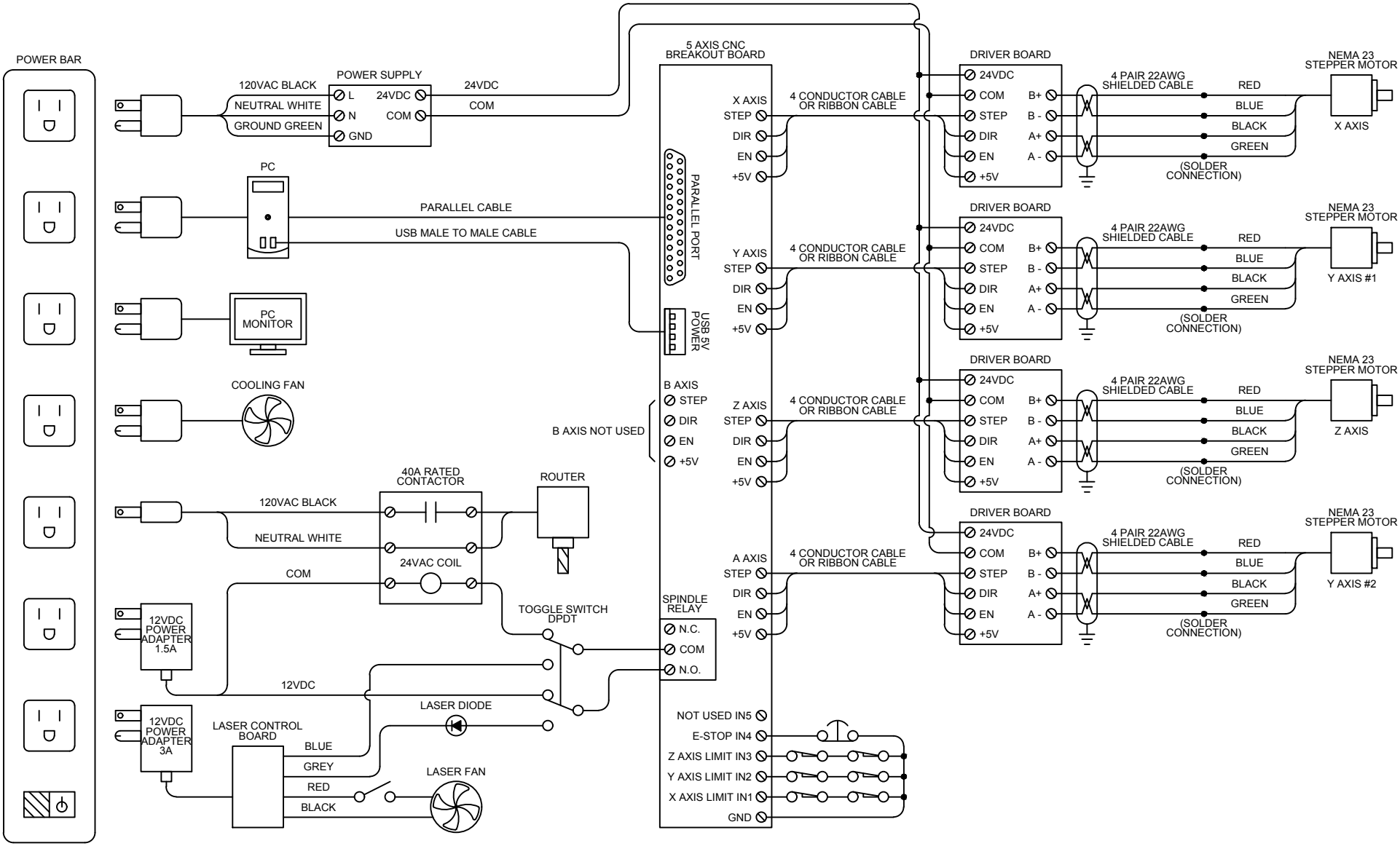
POWER BAR
120VAC BLACK
NEUTRAL WHITE
GROUND GREEN
POWER SUPPLY
L
N
GND
24VDC
COM
24VDC
COM
PC
PARALLEL CABLE
USB MALE TO MALE CABLE
PC MONITOR
COOLING FAN
120VAC BLACK
NEUTRAL WHITE
40A RATED CONTACTOR
24VAC COIL
ROUTER
COM
12VDC POWER ADAPTER 1.5A
12VDC
12VDC POWER ADAPTER 3A
LASER CONTROL BOARD
BLUE
GREY
RED
BLACK
LASER DIODE
LASER FAN
TOGGLE SWITCH DPDT
5 AXIS CNC BREAKOUT BOARD
PARALLEL PORT
USB 5V POWER
B AXIS
STEP
DIR
EN
+5V
B AXIS NOT USED
SPINDLE RELAY
N.C.
COM
N.O.
NOT USED IN5
E-STOP IN4
Z AXIS LIMIT IN3
Y AXIS LIMIT IN2
X AXIS LIMIT IN1
GND
X AXIS
Y AXIS
Z AXIS
A AXIS
STEP
DIR
EN
+5V
4 CONDUCTOR CABLE OR RIBBON CABLE
DRIVER BOARD
24VDC
COM
STEP
DIR
EN
+5V
B+
B -
A+
A -
4 PAIR 22AWG SHIELDED CABLE
RED
BLUE
BLACK
GREEN
(SOLDER CONNECTION)
NEMA 23 STEPPER MOTOR
X AXIS
Y AXIS #1
Z AXIS
Y AXIS #2