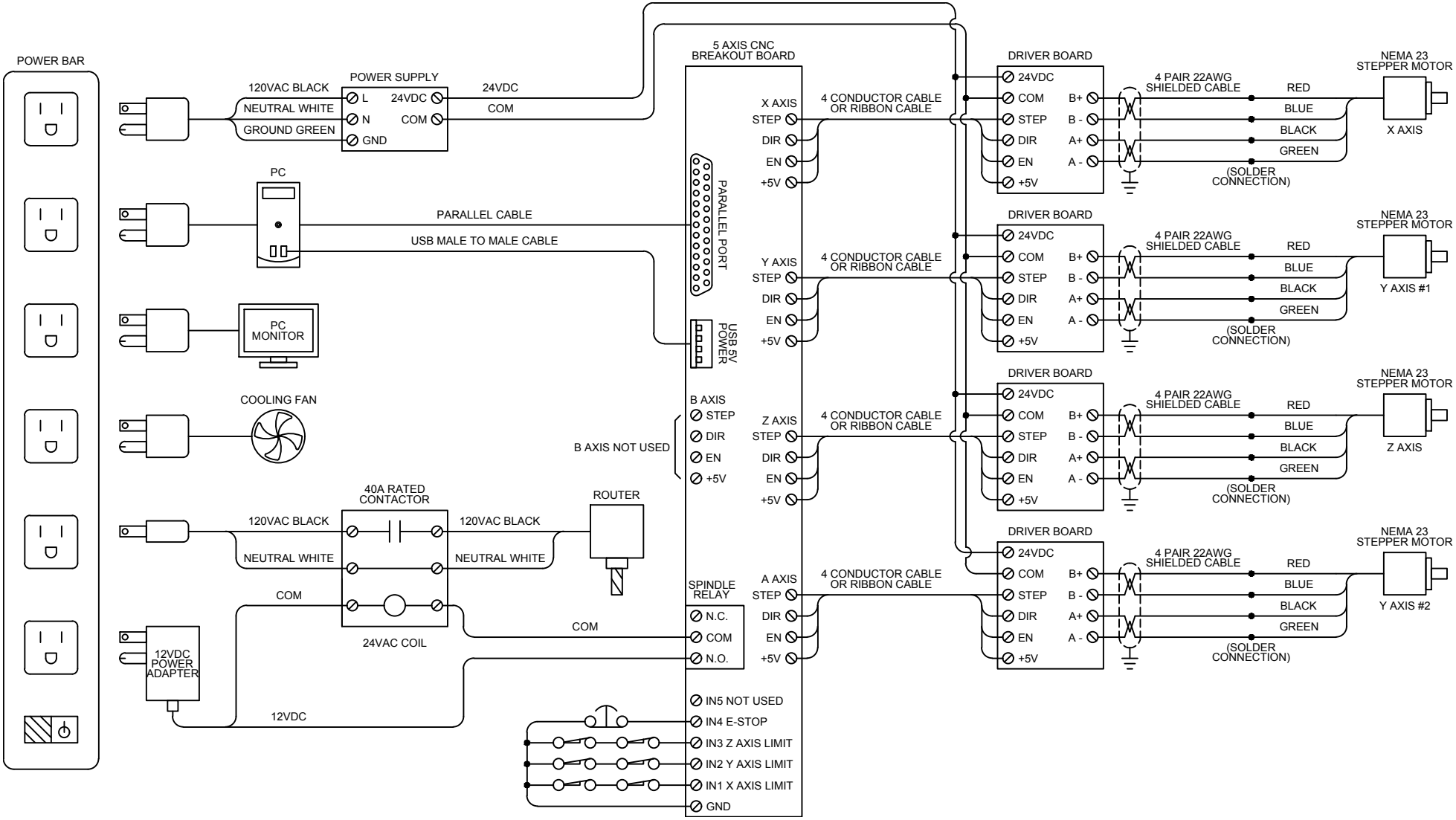
POWER BAR
120VAC BLACK
NEUTRAL WHITE
GROUND GREEN
POWER SUPPLY
L
N
GND
24VDC
COM
24VDC
COM
PC
PARALLEL CABLE
USB MALE TO MALE CABLE
PC MONITOR
COOLING FAN
40A RATED CONTACTOR
120VAC BLACK
NEUTRAL WHITE
COM
24VAC COIL
120VAC BLACK
NEUTRAL WHITE
ROUTER
12VDC POWER ADAPTER
12VDC
COM
5 AXIS CNC BREAKOUT BOARD
PARALLEL PORT
USB 5V POWER
B AXIS
STEP
DIR
EN
+5V
B AXIS NOT USED
SPINDLE RELAY
N.C.
COM
N.O.
IN5 NOT USED
IN4 E-STOP
IN3 Z AXIS LIMIT
IN2 Y AXIS LIMIT
IN1 X AXIS LIMIT
GND
X AXIS
Y AXIS
Z AXIS
A AXIS
STEP
DIR
EN
+5V
4 CONDUCTOR CABLE OR RIBBON CABLE
DRIVER BOARD
24VDC
COM
STEP
DIR
EN
+5V
B+
B -
A+
A -
4 PAIR 22AWG SHIELDED CABLE
RED
BLUE
BLACK
GREEN
(SOLDER CONNECTION)
NEMA 23 STEPPER MOTOR
X AXIS
Y AXIS #1
Z AXIS
Y AXIS #2